Grated waste 1 1/4" - Platinum

IMO

10 100 970 Product version from 10/1/2023

Fits: IMO, LULU, MADISON, MEM, TARA, CL.1, LISSÉ, VAIA, META, CYO

Platinum	10 100 970-08
Chrome	10 100 970-00
Brushed Platinum	10 100 970-06
Durabrass (23kt Gold)	10 100 970-09
Dark Chrome	10 100 970-19
Light Gold	10 100 970-26
Brushed Light Gold	10 100 970-27
Brushed Durabrass (23kt Gold)	10 100 970-28
Brushed Bronze	10 100 970-42
Brushed Champagne (22kt Gold)	10 100 970-46
Champagne (22kt Gold)	10 100 970-47
Brushed Chrome	10 100 970-93
Brushed Dark Platinum	10 100 970-99

We reserve the right to change designs, product range and technical specifications without prior notice.
More information can be found at: www.dornbracht.com +49 (0) 2371 8899 900 mail@dornbracht.com

Grated waste 1 1/4" - Platinum

IMO

10 100 970 Product version from 10/1/2023

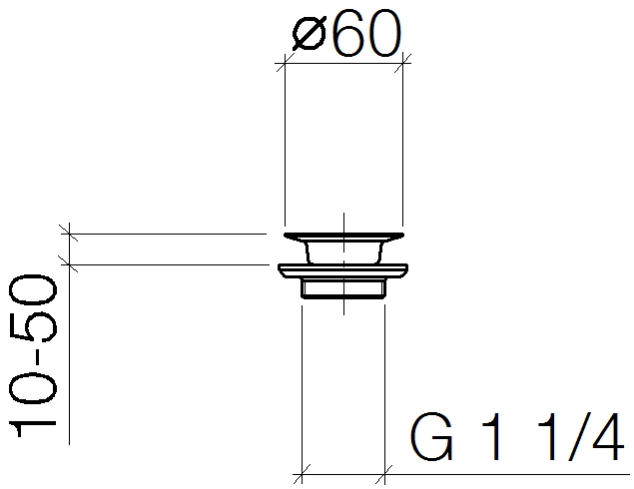

Grated waste 1 1/4" - Platinum

IMO

10 100 970 Product version from 10/1/2023

Parts for other finishes can be found here: Chrome

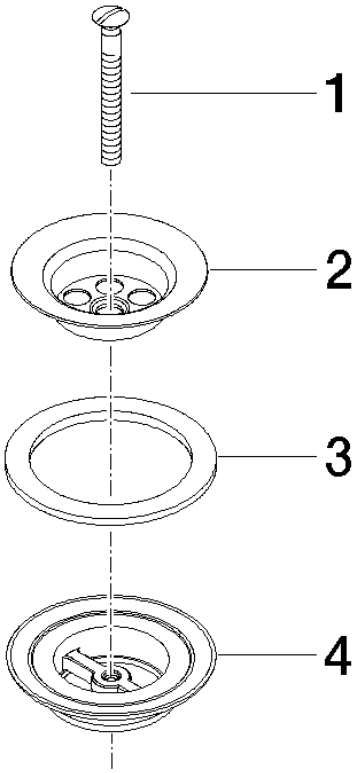

Spare parts list

No.	Item Number	Name	Quantity used	Delivery time
1	09 30 30 115-08	screw	1	60
2	09 11 01 005-08	strainer	1	60
3	09 14 03 005 90	seal	1	60
4	09 11 01 007-07	pop-up waste	1	60

We reserve the right to change designs, product range and technical specifications without prior notice.
More information can be found at: www.dornbracht.com +49 (0) 2371 8899 900 mail@dornbracht.com